一華半導體股份有限公司
MOSDESIGN SEMICONDUCTOR CORP.

TAIPEI : TEL : 886-2- 22783733
FAX : 886-2- 22783633
H.K. TEL : 852- 27569109
FAX : 852- 27566961

SOUND EFFECT

M23522

CANARY 金絲雀叫

FEATURES 功能敘述

- Separate LED and BUZZER driver.
- MODE：ONE-SHOT
  LEVEL-HOLD 1
  LEVEL-HOLD 2 (Repeat)

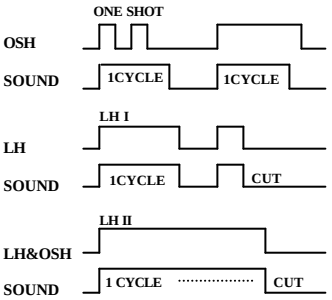

APPLICATION 產品應用

- Toys, Key chain, Door Bell.

ELECTRICAL CHARACTERISTICS 電氣規格

(@V_{DD}=3V unless otherwise specified)

Characteristics	Sym.	Min.	Typ.	Max.	Unit	REMARKS
工作電壓 Operating Voltage	V_{DD}	—	3	3.5	V	
工作電流 Operating Current	I_{OP}	—	0.1	0.5	mA	No load
靜態電流 Quiescent Current	I_{SB}	—	1	5	μA	
推動電流 BZ Driving Current	I_O	1	—	—	mA	@ V_{DS}=1V
推動電流 LO Driving Current	I_{OL}	6	—	—	mA	@ V_{DS}=1.2V
振盪頻率 Oscillator Frequency	F_{OSC}	—	100	—	KHz	±30% TOL.
工作溫度 Operating Temperature	Temp.	0	25	60	℃	

APPLICATION DIAGRAM 參考電路圖

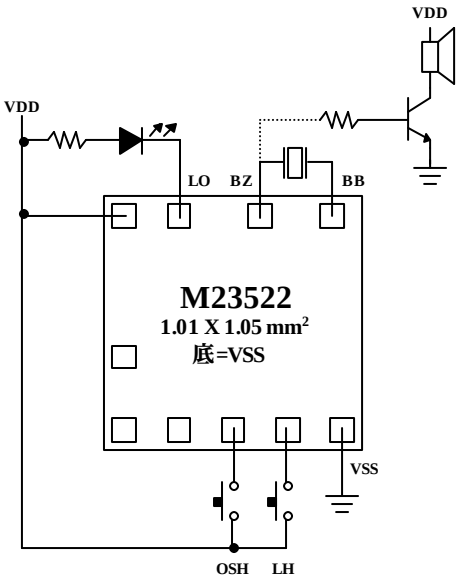

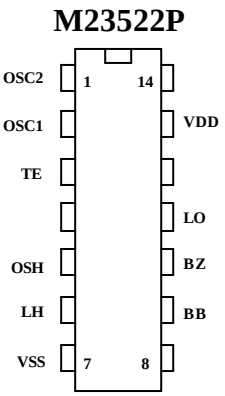

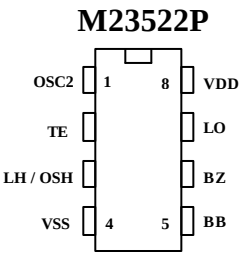

*All specs and applications shown above subject to change without prior notice.
(以上電路及規格僅供參考,本公司得逕行修正)