2 STATES ENCODER
2 態編碼 IC

GENERAL DESCRIPTION 功能敘述

The M1EN is a CMOS ASIC encoder. It will en-code 12 parallel inputs and serially transmit them to the output when transmits enable $\overline{TE}$ depressed. These address inputs are 2 states i.e. LOW (0) or OPEN (1).

FEATURES 產品特長

- Same Rosc matched to the Decoder M1DA/FA.
- 2^{12} = 4,096 codes.
- 4 cycles transmission each time.
- Direct data transmit type：(Eliminating $\overline{TE}$ and diodes).
  — M1EN-H：Switch to VDD.

APPLICATIONS 產品應用

- Car/home alarm system, garage control etc..

BLOCK DIAGRAM 功能方塊圖

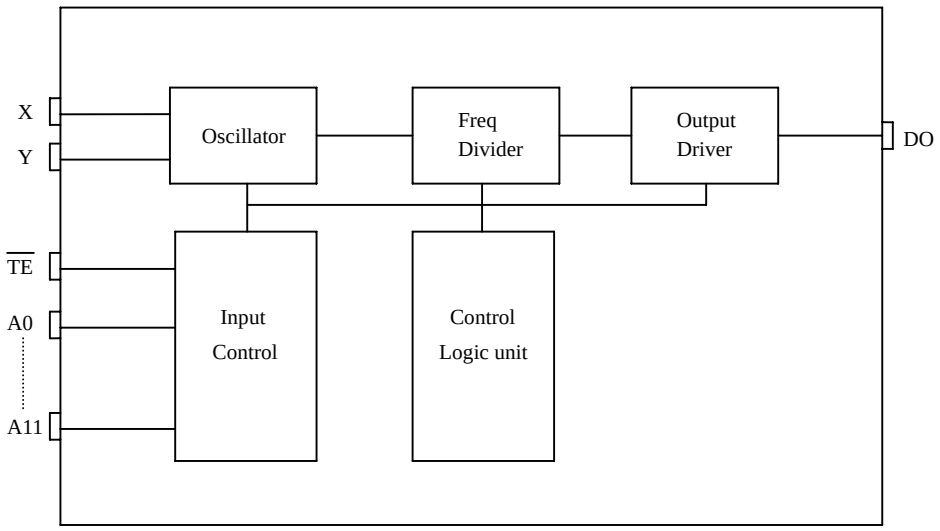

*All specs and applications shown above subject to change without prior notice.
（ 以上電路及規格僅供參考,本公司得徑行修正 ）

2 STATES ENCODER
2 態編碼 IC

ABSOLUTE MAXIMUM RATINGS

(TA=25℃)

Parameter	Rating	Unit
Supply Voltage	-0.3 to 12	V
Input Voltage	-0.2~V_{DD}+0.2	V
Operating Temperature	-20 to 70	℃
Storage Temperature	-50 to 125	℃

ELECTRICAL CHARACTERISTICS

Characteristics	Sym.	Min.	Typ.	Max.	Unit	Conditions
Operating Voltage	V_{DD}	2.4	—	12	V	
Operating Current	I_{OP}	—	0.1	1	mA	No load
Quiescent Current	I_{SB}	—	0.1	0.5	μA	
Output Drive Current	I_O	—	2	—	mA	@V_{DS}=1.2V
Input Voltage	V_{IH}	V_{DD}–0.2	V_{DD}	V_{DD}	V	
	V_{IL}	V_{SS}	V_{SS}	V_{SS}+0.2		
Oscillator Frequency	Fosc	—	76	—	KHz	External±30%, Rosc=220KΩ

PIN DESCRIPTION

No.	Name	Description
1~8	A0~A7	Address inputs
9	VSS	Negative power supply
10~13	A8~A11 / D0~D3	Address inputs / Data input
14	$\overline{TE}$	Transmit enable
15	Y	Oscillator output
16	X	Oscillator input
17	DO	Data output
18	VDD	Positive power supply

M1EN

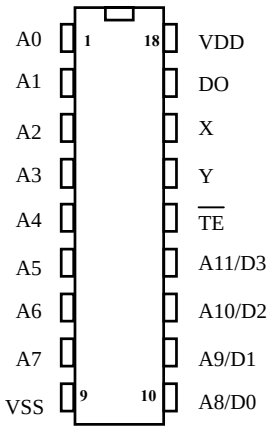

TIMING WAVEFORM

(1) BIT FORMAT

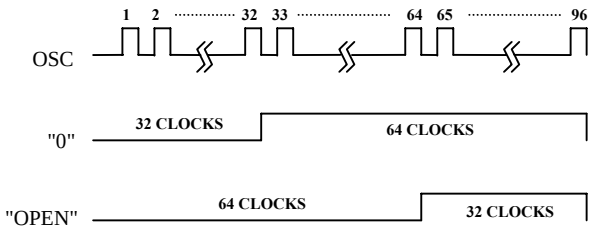

(2) TIMING DIAGRAM

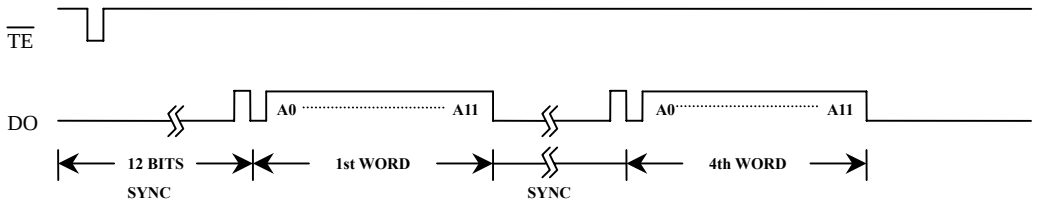

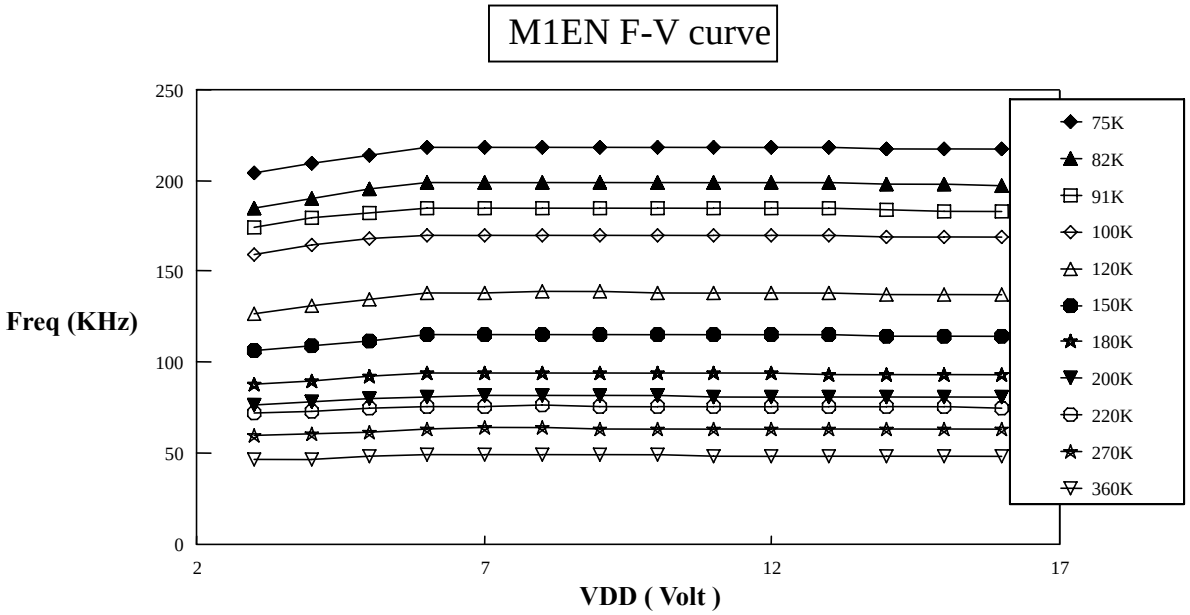

OPERATING FLOWCHART

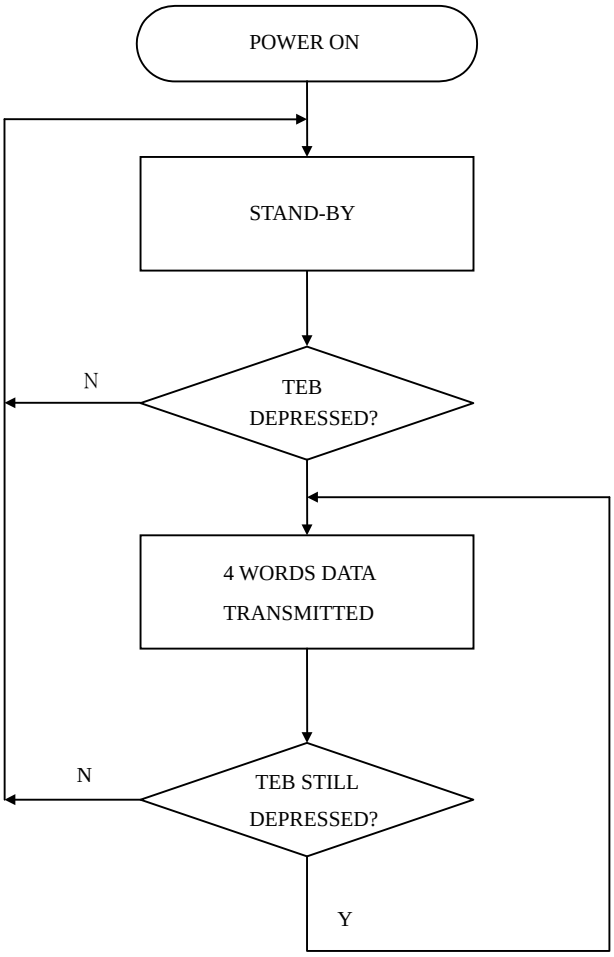

RECONNENDED OSCILLATOR PARAMETERS

Rosc (KΩ)	M1EN (KHz)
75	218
82	199
91	185
100	170
120	142
150	115
180	95
200	86
220	78
270	63
300	57
330	51
360	49

DATA OUTPUT

M1EN (D0~D3)	M1DA/FA (D0~D3)
0 (VSS)	1 (VDD)
1 (OPEN)	0 (VSS)

Freq-Rosc chart
(@VDD=12V)

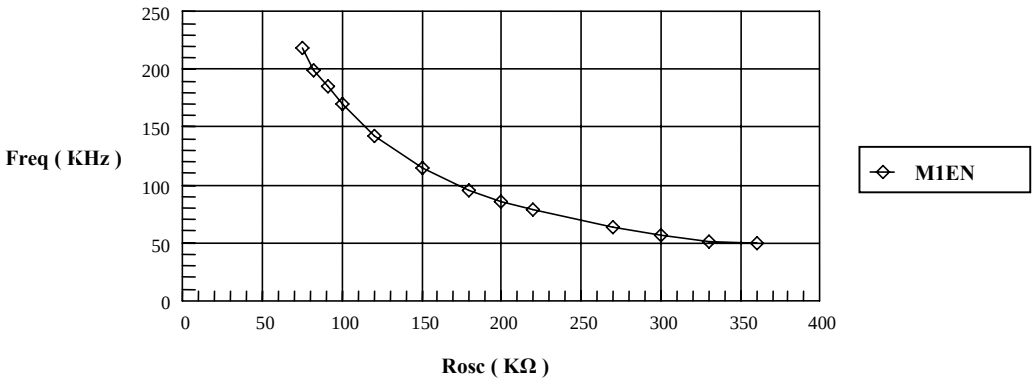

APPLICATION DIAGRAM 參考電路圖

*** DATA TYPE**

DIP 18 PIN

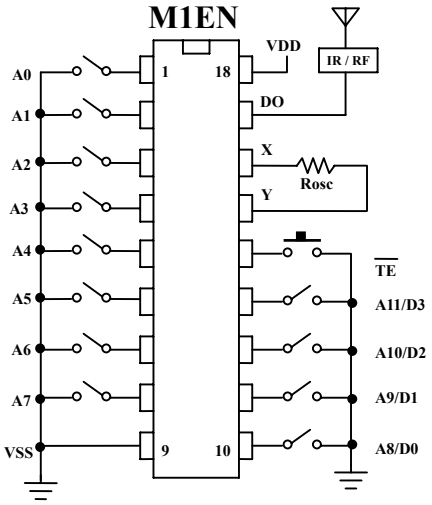

DIP 16 PIN

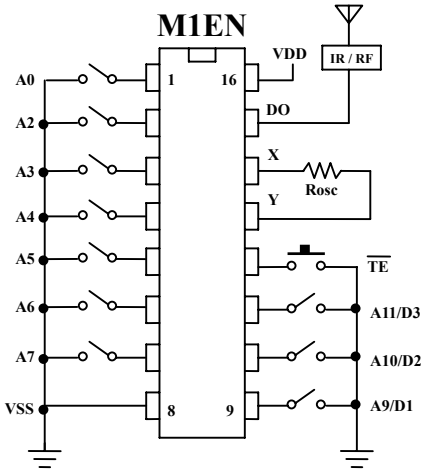

直接發射(VDD)

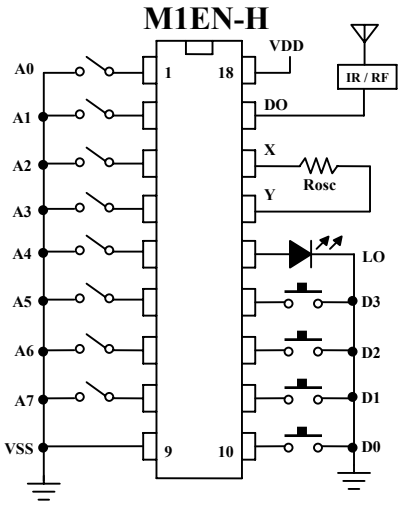
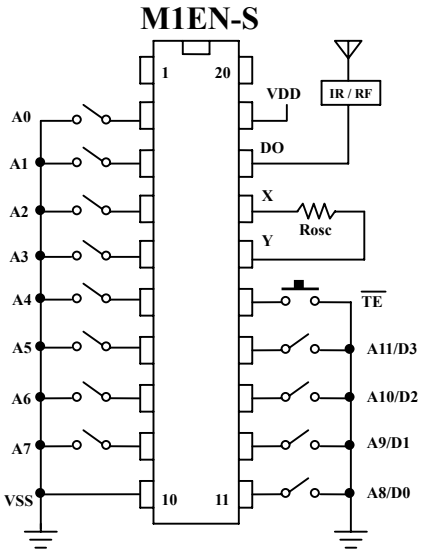
SOP 20 PIN